Data Sheet

Article number: 140571664
Description: KLEE Fork joint G 16x64 M16, left

Measures

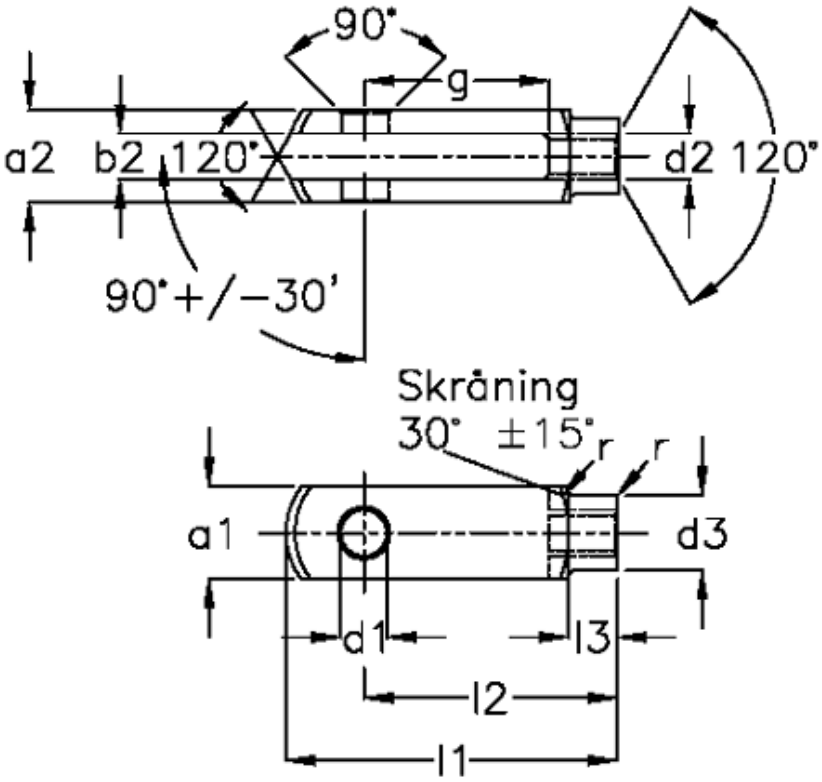

a1 (h11)	= 32	g (+/-0.5)	= 64
a2	= 32 (+0,3 -0,16)	l1 (+/-0.5)	= 115
b1 (B13)	= 16	l2	= 96 (-0,4)
b2	= 16 (+0,7 +0,15)	l3	= 24 (+/-0,2
d1 H9	= 16	r	= 1.0
d2	= M 16 x 2	Size	= G 16 x 64
d3 (+/-0.3)	= 26	Weight	= 0.411
f (+/-0.2)	= 1.0		

Product drawings and brochures of any kind may contain errors for which Brd. Klee A/S cannot be liable.